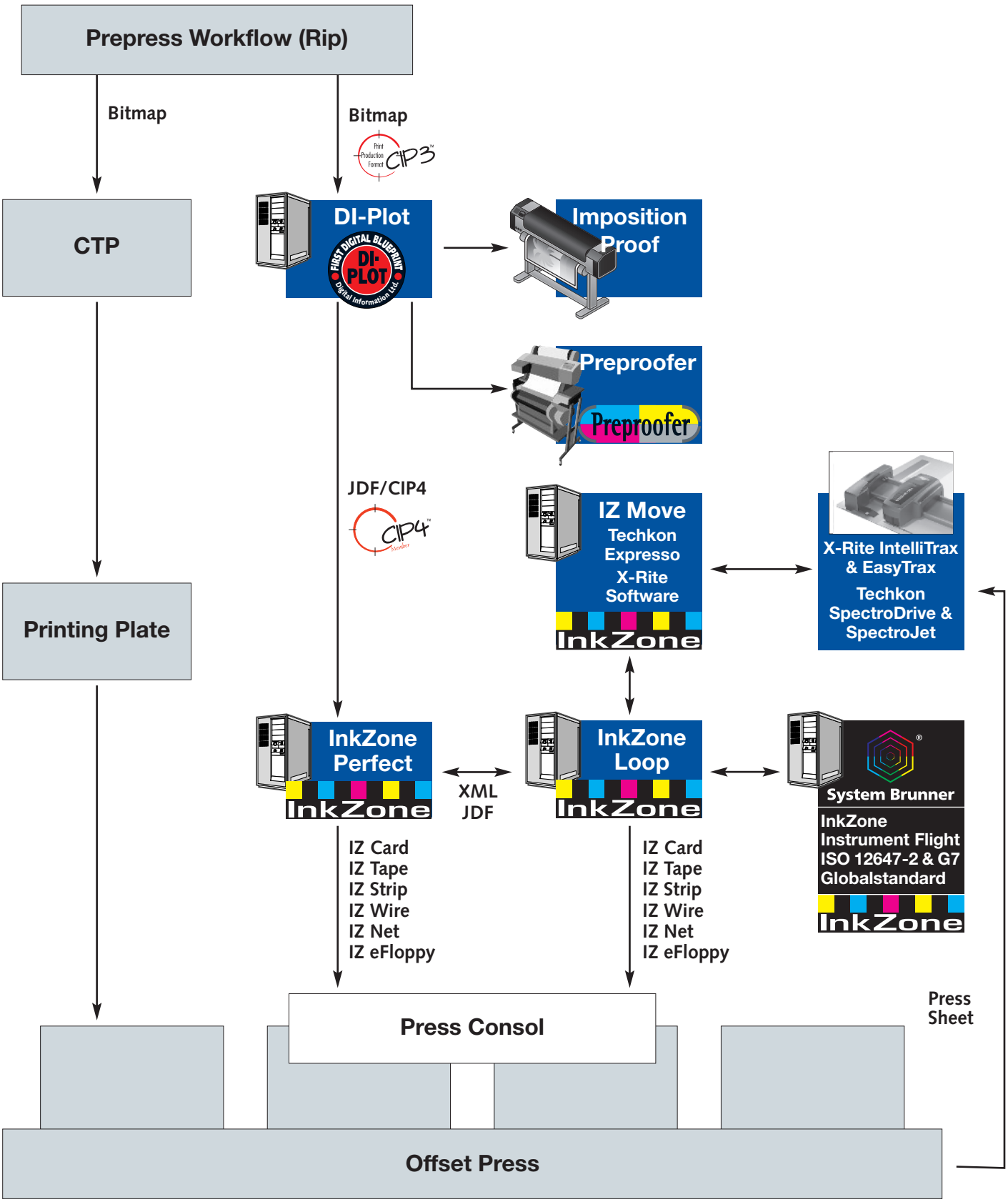The DI-Workflow